CBC GROUP

GANZ Lite Analog HD

GanzLite IN -Door IR Dome

- Indoor Fixed Lens Dome
- 5.0 Megapixel 2592 X 1944 (LAI-D033650-IRY)
- 2.0 Megapixel 1920 X1080 (LAI-D033620-IRY)
- 1.3 Megapixel 1280 X 720 (LAI-D033613-IRY)
- 3.6 mm Fixed Lens
- 2.8mm True wide Fixed Lens (Optional)
- 6mm & 8mm Fixed Lens (Optional)
- True Day/Night with ICR
- Support D-WDR Function
- 2D/3D Noise Reduction
- Slow Exposure Shutter Speed (Sens-Up)
- Ultra clear image at night without dark corner
- Min. Illumination up to 0.01Lux@F1.2; 0Lux with IR on
- 24 pcs Oblong IR LED,5~30 Meters Night Vision
- High contrast image of night with customized Split-beam SMT IR LED

5.0,2.0, & 1.3 Mega 4 IN 1 HD Camera HD OUT - AHD / TVI / CVI / CVBS

TECHNICAL SPECIFICATIONS

Model Name		LAI-D033650-IRY 4 IN 1 OUTPUT	LAI-D033620-IRY 4 IN 1 OUTPUT	LAI-D033613-IRY 4 IN 1 OUTPUT
System		PAL/NTSC		
Image Sensor		1/2.7" Omnivision Progressive Scan Sensor Low Lux Performance	1/2.7" Sony Progressive Scan Sensor Low Lux Performance	1/3" Sony Progressive Scan Sensor Low Lux Performance
Scanning System		Progressive Scan		
Maximum Image Resolution		2592X1944	1920X1080	1280X720
Video Image Quality		As high as HD-SDI		
Lens Type		3.6mm fixed lens f 1.2 (2.8mm / 6.0 mm / 8.0 mm Optional)		
S/N Ratio		More than 50dB (AGC OFF)		
Analog Output		5.0 MEGA AHD / TVI / CVI / CVBS	1920 X 1080 AHD / TVI / CVI / CVBS	1280 X 720 AHD / TVI / CVI / CVBS
Min. Illumination		up to 0.01Lux@F1.2; 0Lux with IR on		
Exposure Shutter Speed		AUTO, 1/25, 1/50, FLK, 1/200, 1/400, 1/1000, 1/2000, 1/5000, 1/10000, 1/50000, X2, X4, X6, X8, X10, X15, X20, X25, X30		
D-WDR		AUTO, OFF, ON (LEVEL: 0~8)		
Defog		OFF, AUTO (GRADATION: 0~2)		
Backlight		OFF, BLC, HSBLC (4 AREA)		
White Balance		ATW, AWC-SET, INDOOR, OUTDOOR, AWB, MANUAL		
Day&Night		AUTO, COLOR, B/W, EXT		
DNR	2DNR	OFF, LOW, MIDDLE, HIGH		
	3DNR	OFF, LOW, MIDDLE, HIGH		
RS485	CAM ID	0~255		
	ID DISPLAY	OFF, ON		
	BAUDRATE	2400, 4800, 9600, 19200, 38400		
D-EFFECT		FREEZE, MIRROR, NEG. IMAGE		
Privacy Mask		OFF, ON (4 AREA SELECTABLE)		
Defect		LIVE DPC, WHITE DPC, BLACK DPC		
SENS-UP		X2, X4, X6, X8, X10, X15, X20, X25, X30		
Language		ENGLISH, CHINESE, GERMANY, FRENCH, ITALIAN, SPANISH, POLISH, RUSSIAN, PORTUGUESE, DUTCH, TURKISH		
IR LED		24 pcs. Oblong High Power IR LED		
IR Range		5~30 Meters		
Operating Temperature		-10°C ~ +50°C (14°F~122°F)		
Power Supply		DC 12V±1V		
Protection Level		IP55 Dustproof		
Power Consumption		82mA/DC12V (DAY); 270 mA/DC12V (with IR LED ON)		
Dimensions		98.0 mm (Base Dia.) X 76.0 mm (H)		
Weight		Approx. 186g		

DIMENSIONS

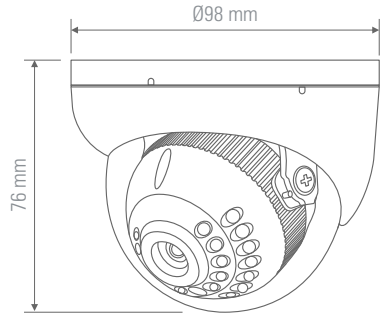

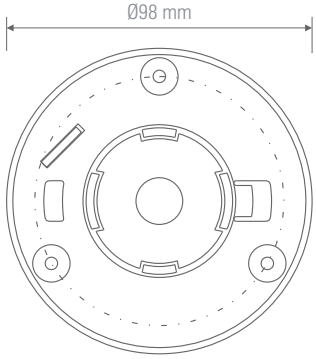

The above mentioned technical drawings are for reference only.

Katana

Japanese
Traditionally